Front view and mounting

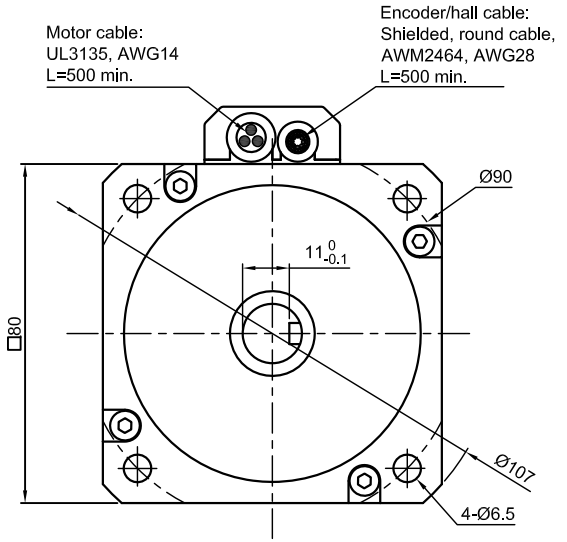

Side view

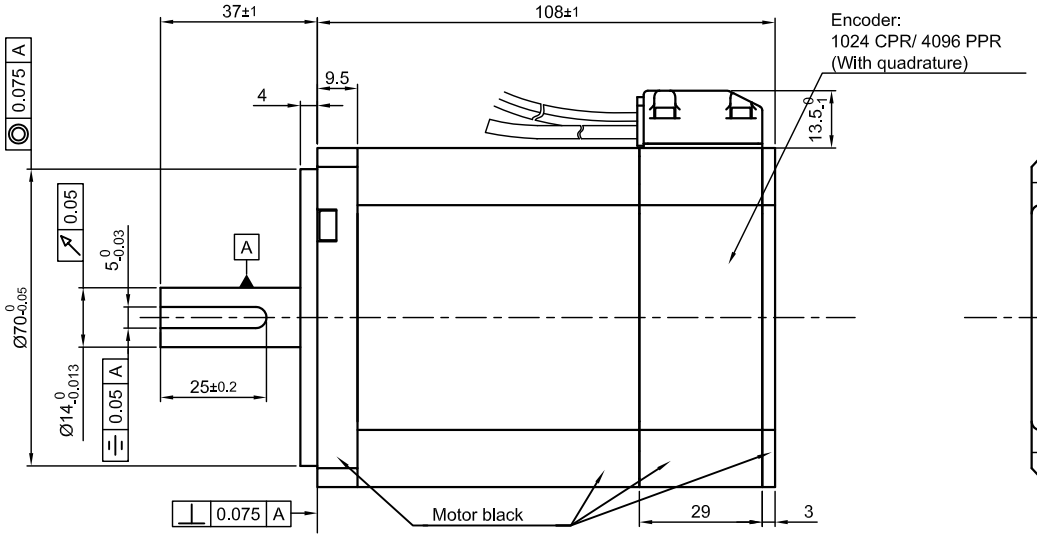

Rear view

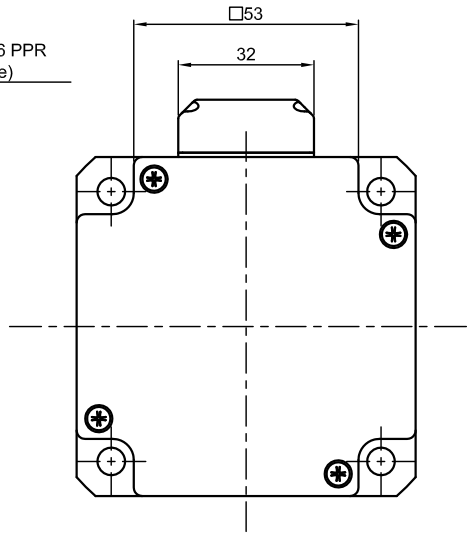

SPECIFICATION / CONNECTION	DELTA
NO. OF POL./PHASE	8/3
VOLTAGE RATED (VDC)	48
CURRENT RATED/NO LOAD/PEAK (A)	14/0.7/40
RESISTANCE/LINE TO LINE (Ohms) @25°C	0.1±10%
INDUCTANCE/LINE TO LINE (mH) @1KHz	0.6±20%
TORQUE RATED/PEAK (Nm) [lb-in]	1.7/5 [15.05/44.25]
TORQUE CONSTANT (Nm/A) [lb-in/A]	0.12 [1.062]
POWER RATED (W)	534
SPEED RATED/NO LOAD (RPM)	3000/4250±10%
ROTOR INERTIA (g.cm^2)	1020
WEIGHT (Kg) [lb]	1.2 [2.65]

TEMPERATURE RISE: MAX.80°C

AMBIENT TEMPERATURE -10°~ 50°C [14°F ~ 122°F]

INSULATION RESISTANCE 100 MOhm (UNDER NORMAL TEMPERATURE AND HUMIDITY)

INSULATION CLASS B 130° [266°F]

DIELECTRIC STRENGTH 500VAC FOR 1 MIN. (BETWEEN THE MOTOR COILS AND THE MOTOR CASE)

AMBIENT HUMIDITY MAX. 85% (NO CONDENSATION)

PERMISSIBLE RADIAL+AXIAL FORCE

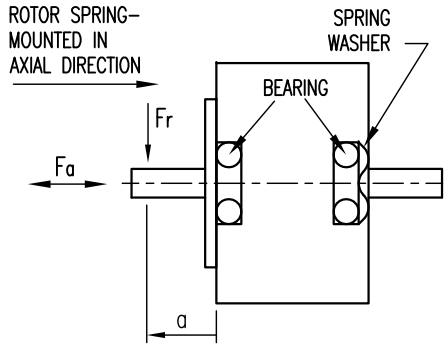

		AXIAL	RADIAL
AXIAL-FORCE Fa (N)	45		
DISTANCE a (mm)	20		
RADIAL-FORCE Fr (N)	115		
SHAFT PLAY (mm)		0.2max	0.025
AT LOAD MAX: (N)		250	4.6

MOTOR CABLE	
WIRE COLOR	FUNCTION
YEL	U
RED	V
BLK	W

ENCODER/HALL CABLE	
WIRE COLOR	FUNCTION
GN	A
BN	/A
GY	/B
WH	B
YE	/I
OG	I
BU	H1
PK	H3
VT	H2
BK	GND
RD	VCC(+5V to +24V)
HOUSING	SHIELDING

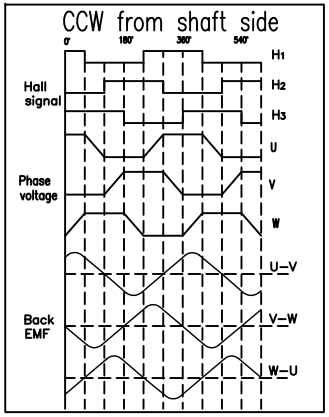

DELTA CONNECTING

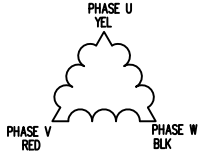

REV	DESCRIPTION	DATE	DRN
A	–	25.08.16	GYQ

Nanotec® PLUG & DRIVE

Surface specification DIN ISO 1302 | General tolerances DIN ISO 2768-CH | Work piece edge DIN ISO 13715

APVD	G.S.	06.01.16
CHKD		
DRN	GYQ	06.01.16
SIGNATURE		DATE

BRUSHLESS DC MOTOR

DWG.NO DB80M048030-ENM05J